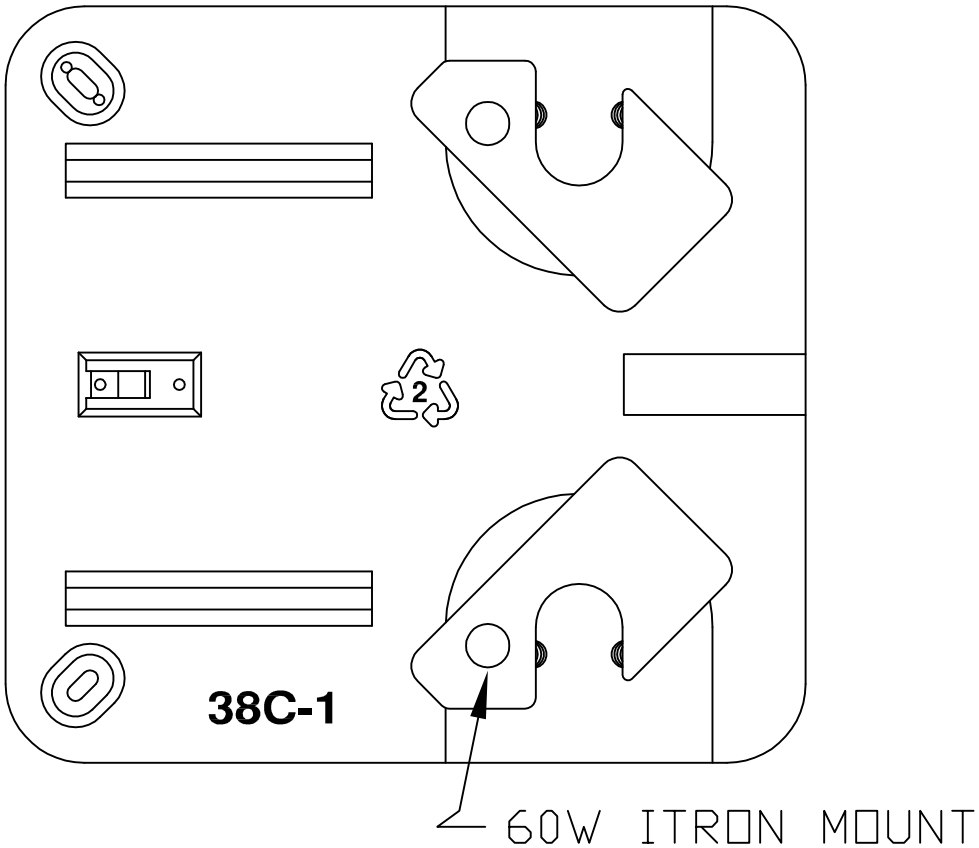

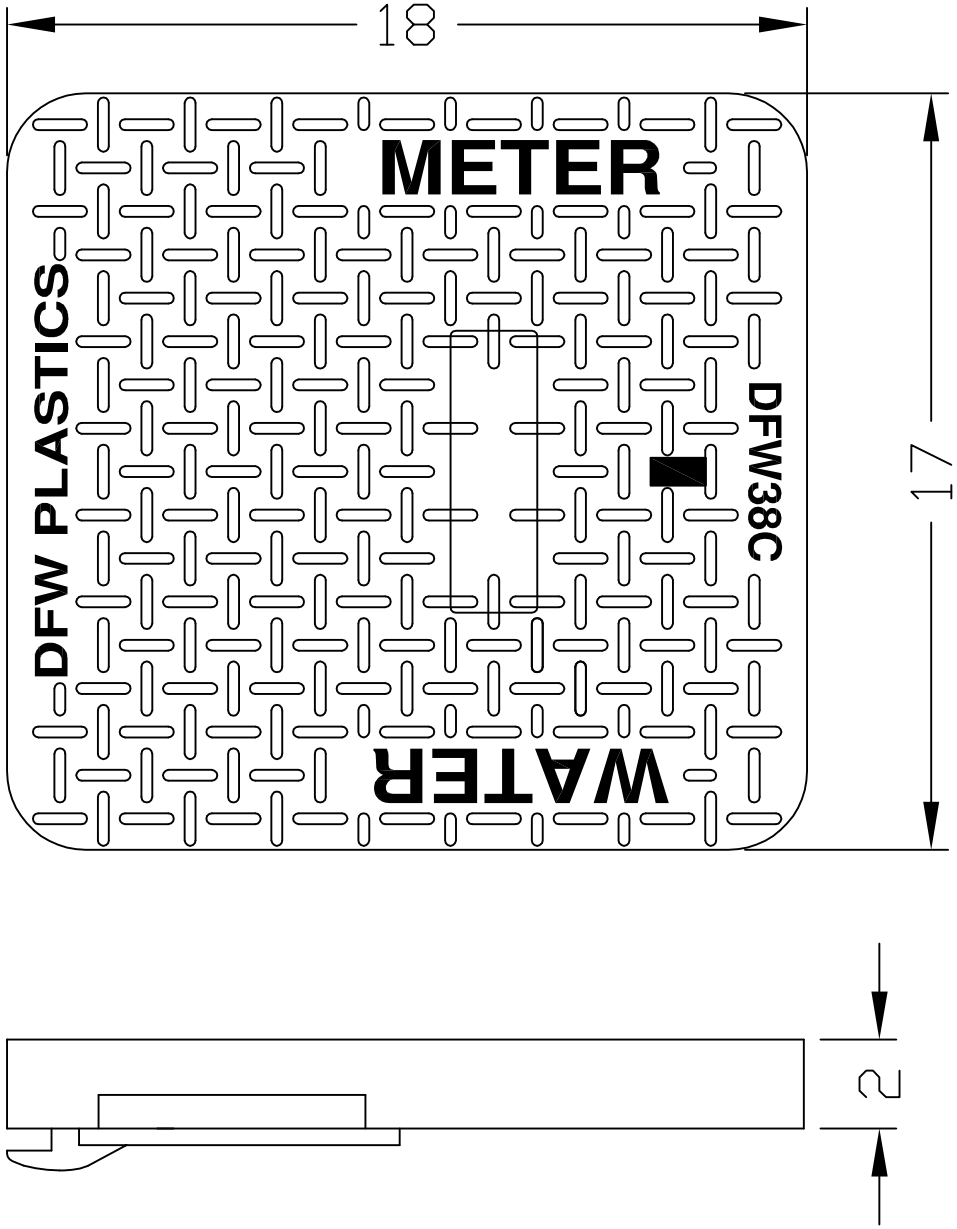

DFW38C-1A2-LID