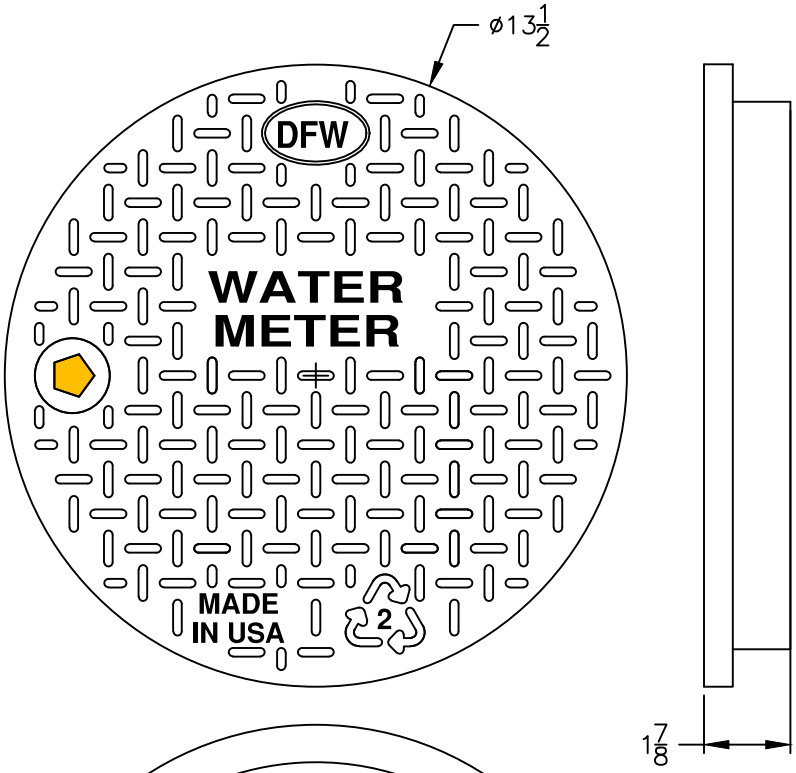

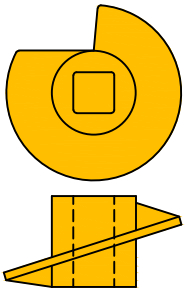

DFW-WORMGEAR

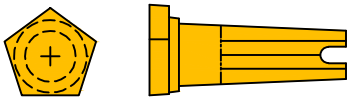

DFW-STEM - STANDARD HEAD

ROUND TAPERED PIN
W/ (4) FLAT SIDES, EACH
FLAT HAS A CENTER SPINE

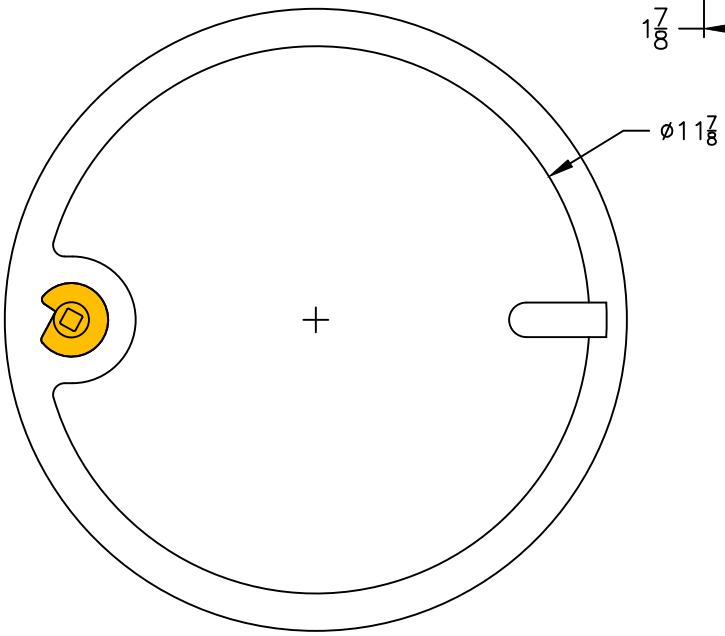

LID KEY	
1	BLACK COLOR
W	WORM LOCK w/ STD BRASS STEM

NOTES
1) DIM'S ± 1/8" U.N.O.
2) LID MATERIAL: HDPE

DFW PLASTICS, INC. ENGAGES IN ONGOING RESEARCH AND DEVELOPMENT TO IMPROVE AND ENHANCE ITS PRODUCTS. THEREFORE, DFW PLASTICS, INC. RESERVES THE RIGHT TO CHANGE PRODUCT OR SYSTEM SPECIFICATIONS WITHOUT NOTICE.

DFW PLASTICS, INC.
PO BOX 648
BEDFORD, TEXAS 76095
(817) 439-3600
(817) 439-3700 (f)
www.dfwplasticsinc.com

DFW12ACO-1W-LID

CREATED:	10/21/2014
UPDATED:	10/21/2014
ACCEPTED:	JMc
DRAWN BY:	RMc
PLOT SCALE:	1:4

THIS DRAWING IS THE PROPERTY OF DFW PLASTICS, INC.