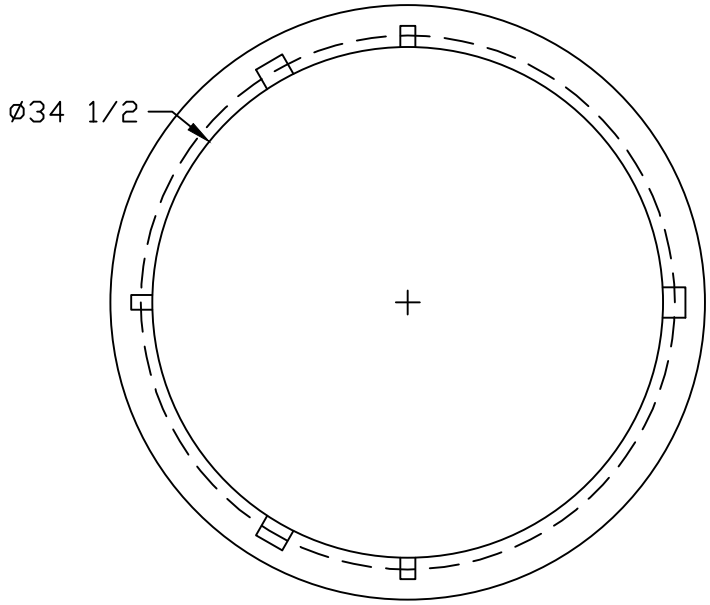

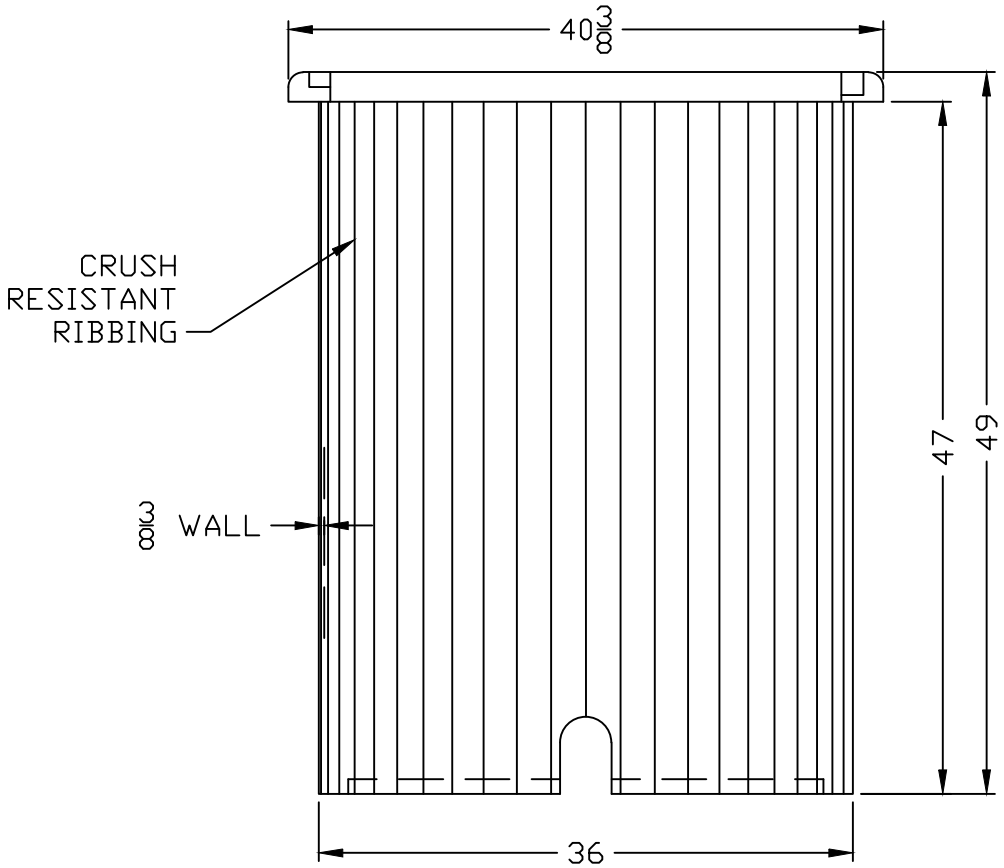

NOTES
1) DIM'S ± 1/8" U.N.O.
2) BODY MATERIAL: LLDPE
3) WALL THICKNESS: 3/8" MINIMUM

DFW PLASTICS, INC. ENGAGES IN ONGOING RESEARCH AND DEVELOPMENT TO IMPROVE AND ENHANCE ITS PRODUCTS. THEREFORE, DFW PLASTICS, INC. RESERVES THE RIGHT TO CHANGE PRODUCT OR SYSTEM SPECIFICATIONS WITHOUT NOTICE.

DFW PLASTICS, INC.
PO BOX 648
BEDFORD, TEXAS 76095
(817) 439-3600
(817) 439-3700 (f)
www.dfwplasticsinc.com

DFW3648

CREATED: 08/27/2010
UPDATED: 03/28/2014
ACCEPTED: JMc
DRAWN BY: RMc
PLOT SCALE: 1:12

THIS DRAWING IS THE PROPERTY OF DFW PLASTICS, INC.