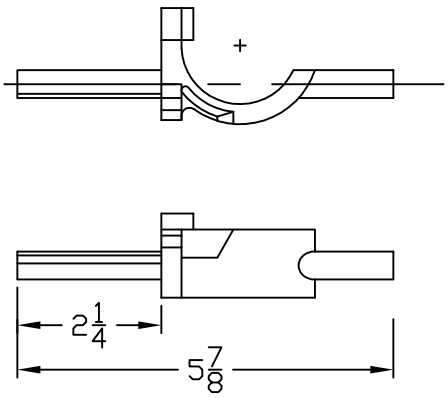

DFW-BLOCK-XL

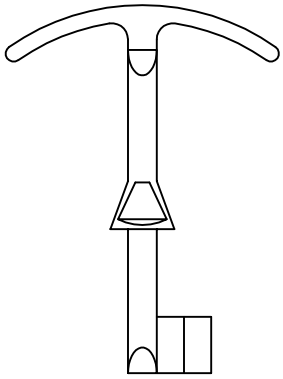

DFW-KEY

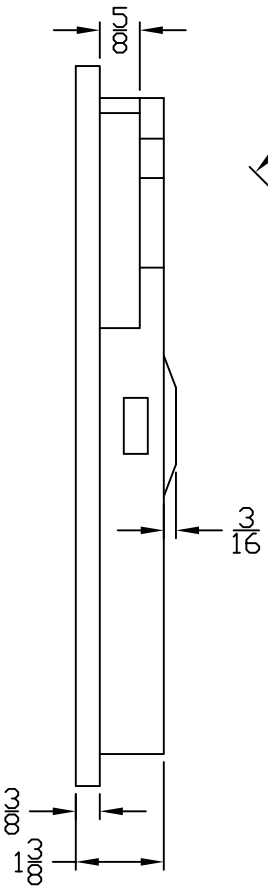

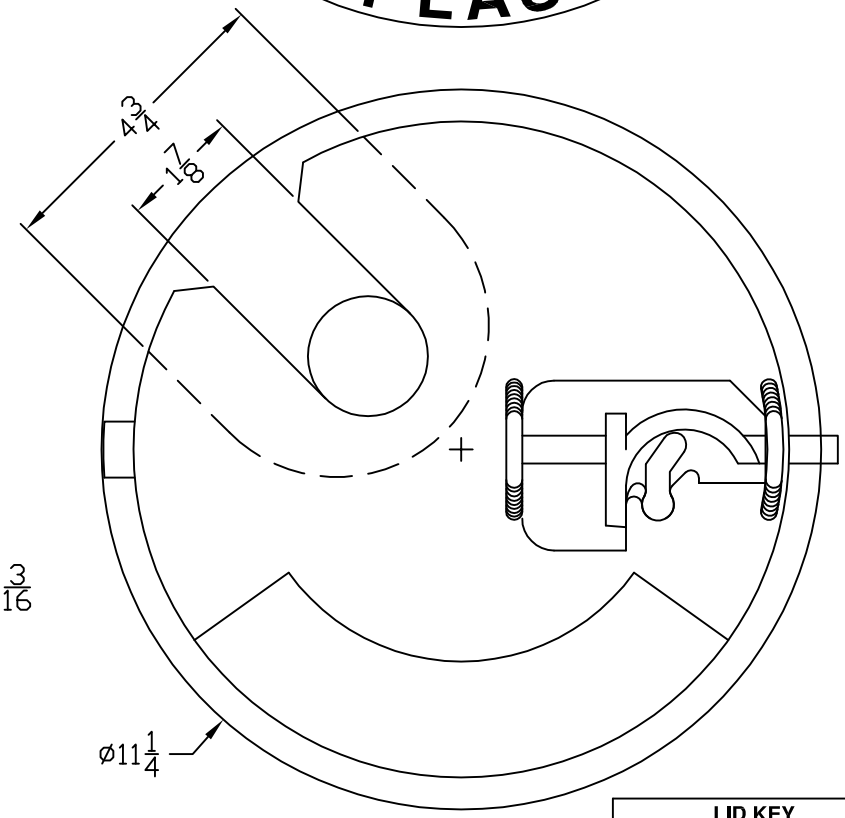

LID KEY	
1	BLACK COLOR
B	BRASS LOCK
A	AMR SLIDE MOUNT

NOTES
1) DIM'S ± 1/8 U.N.O.
2) AMR SLIDE WILL RECEIVE THE NEPTUNE R900

DFW PLASTICS, INC. ENGAGES IN ONGOING RESEARCH AND DEVELOPMENT TO IMPROVE AND ENHANCE ITS PRODUCTS. THEREFORE, DFW PLASTICS, INC RESERVES THE RIGHT TO CHANGE PRODUCT OR SYSTEM SPECIFICATIONS WITHOUT NOTICE.

DFW
DFW PLASTICS, INC.
1001 JARVIS RD
FORT WORTH, TX. 76179
(817) 439-3600
(817) 439-3700 (f)
www.dfwplasticsinc.com

DFW10AMR-1BA-LID

FILE NAME:
*
*

UPDATED: 09/30/2011

DRAWN BY: J.C.A.

PLOT SCALE: 1:3

THIS DRAWING IS THE PROPERTY OF DFW PLASTICS, INC.